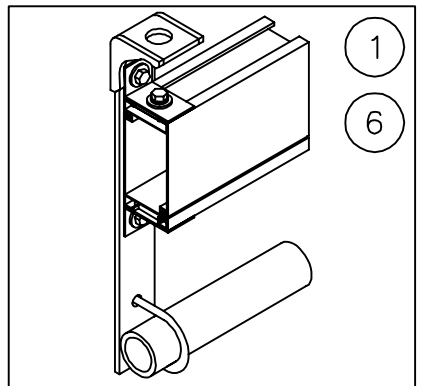

SH – SINGLE PIPE HANGER

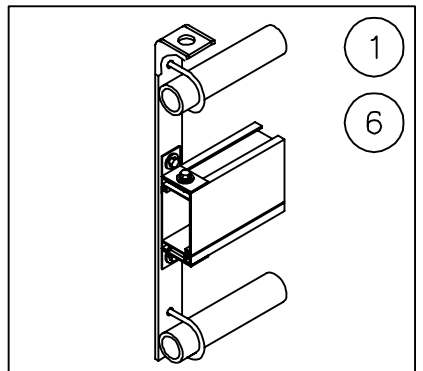

DH – DOUBLE PIPE HANGER

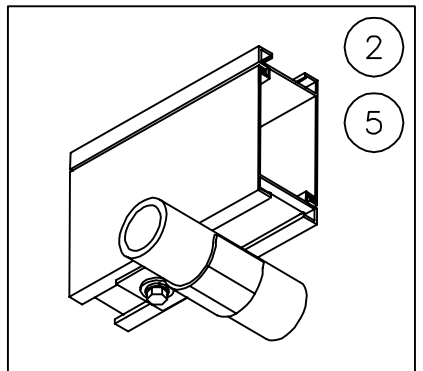

GH – GRID HANGER

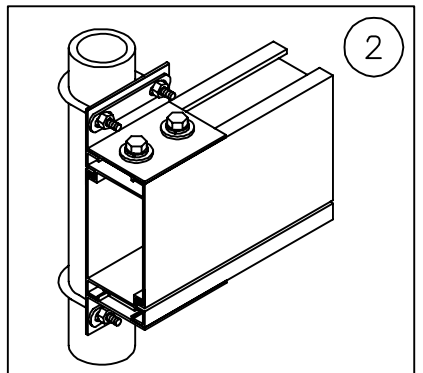

VH – VERTICAL PIPE HANGER

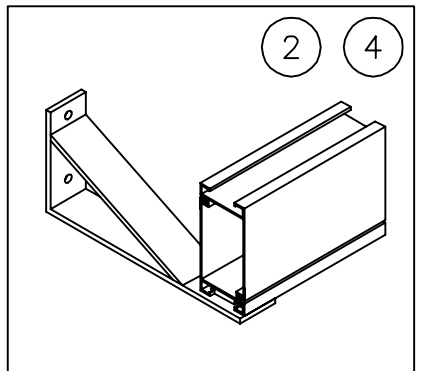

WH – WALL HANGER

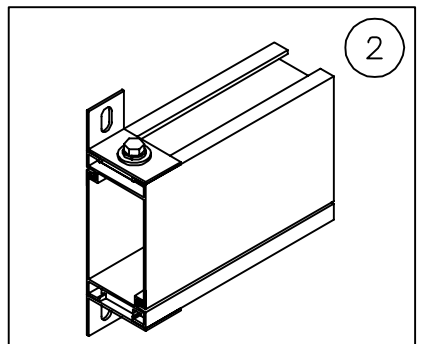

BH – BOLT–ON HANGER

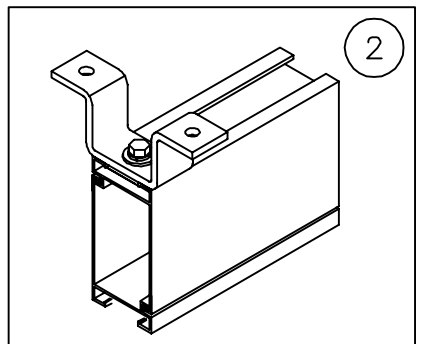

CH – CEILING HANGER

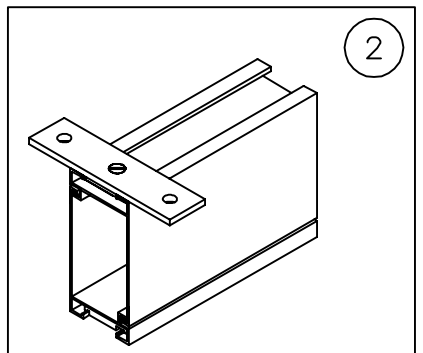

FH – FLAT HANGER

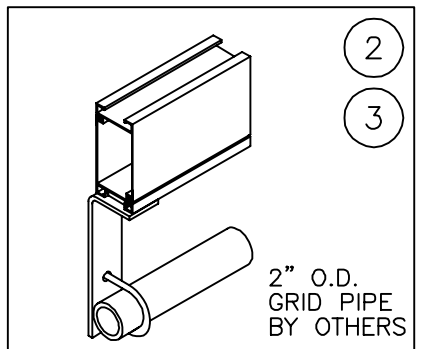

MS–MID SPAN HANGER

		Hangers
AK/92201-01	SH	Single Pipe Hanger - supports fixture load on pipe
AK/92202-01	DH	Double Pipe Hanger - supports fixture load on pipe
AK/92203-02	GH	Grid Hanger - not intended to support fixture load on pipe
AK/92204-02	VH	Vertical Pipe Hanger - not intended to support fixture load on pi
AK/92205-02	WH	Wall Hanger - not intended to support fixture load on pipe
AK/92206-02	BH	Bolt-On Hanger - not intended to support fixture load on pipe
AK/92207-02	CH	Ceiling Hanger - not intended to support fixture load on pipe
AK/92208-02	FH	Flat Hanger - not intended to support fixture load on pipe
AK/92209-02	MS	Mid Span Hanger - not intended to support fixture load on pipe

1. SUPPORTS FIXTURE LOAD ON PIPE.(see Load Rating Data Sheet)
2. NOT INTENDED TO SUPPORT FIXTURE LOAD.
3. MUST BE USED WITH DH OR SH HANGER EITHER SIDE.
4. LONG LEAD ITEM (Call Factory For Pricing and Delivery)
5. CHANNEL TO SIT ON TOP OF GRID PIPE (Do Not Underhang Channel)
6. TO BE HUNG FROM 3/16" or 1/4" AIRCRAFT CABLE (see rigging kits) (Threaded Rod Not Acceptable for Rigging Channel Mount)

CHECKED BY	DRAWN	REV.	DATE	REVISION DESCRIPTION
	DD	D	REVDATED	DESC.D
	DC	C	REVDATEC	DESC.C
	DB	B	REVDATEB	DESC.B
	DA	A	REVDATEA	DESC.A

ARKADIUM
449 Laird Road
Unit #1 Guelph
Ontario N1G 4W1
519-837-8367
519-837-2487 (fax)
www.arkadiumdistro.com

CUS. CUSTOMER
REP. REPRESENTATIVE
P.O.# ORDER_NO.
DRAWN BY
TITLE AK/922XX–XX Channel Mount Hangers
SYSTEM SYSTEM
DATE Sept/06
SCALE SCALE
JOB NAME JOBNAME
LOCATION
SHEET SHT
JOB # JOB#