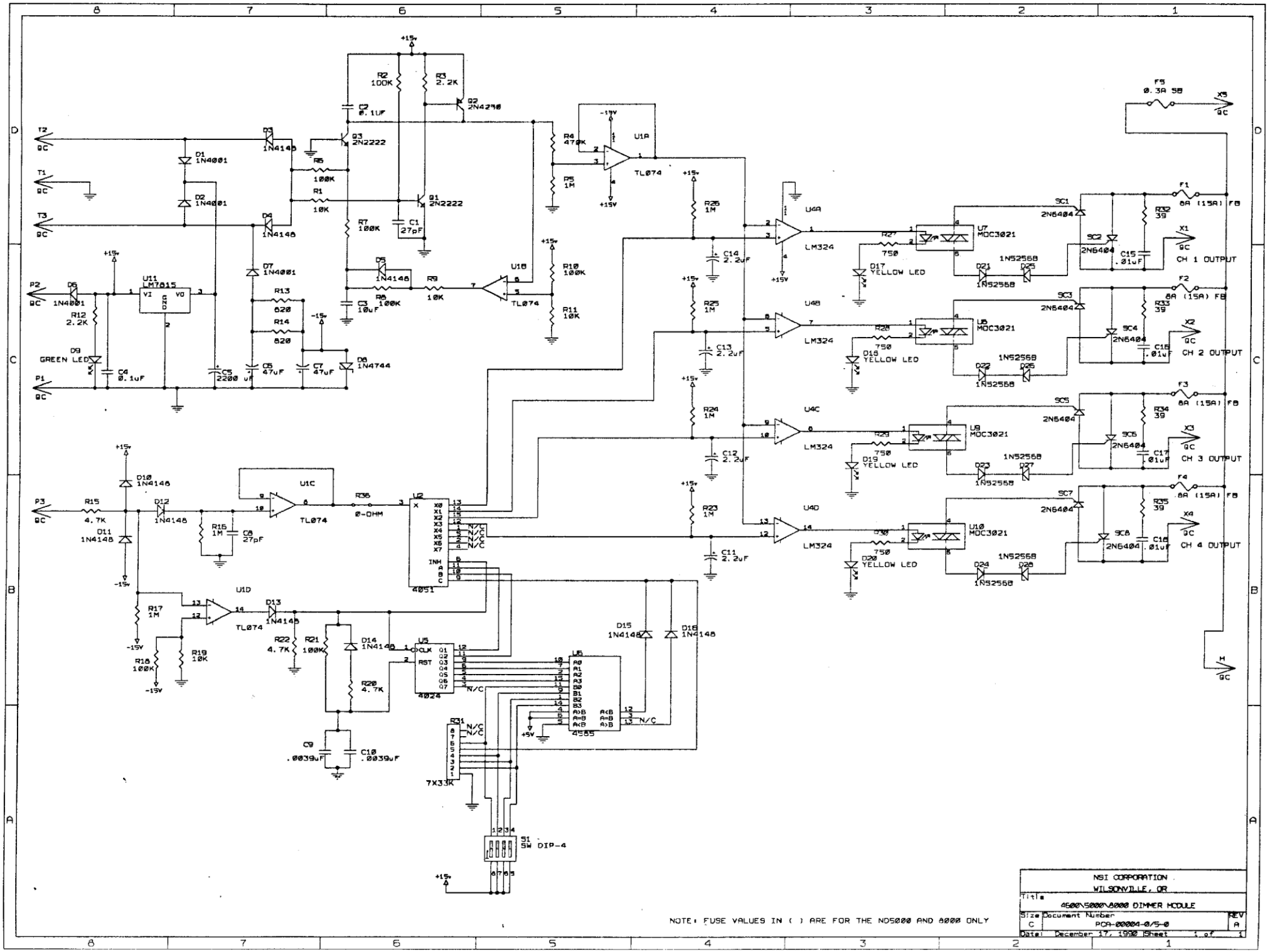
NSI CORPORATION
WILSONVILLE, OR
Title
4600\5000\8000 DIMMER MODULE
Size C
Document Number PCA-00004-0/5-0
REV A
Date: December 17, 1990 Sheet 1 of 1
NOTE: FUSE VALUES IN ( ) ARE FOR THE ND5000 AND 8000 ONLY
CH 1 OUTPUT
CH 2 OUTPUT
CH 3 OUTPUT
CH 4 OUTPUT
GREEN LED
YELLOW LED
U11 LM7815
U1A TL074
U1B TL074
U1C TL074
U1D TL074
U4A LM324
U4B LM324
U4C LM324
U4D LM324
U7 MOC3021
U8 MOC3021
U9 MOC3021
U10 MOC3021
U2 4051
U5 4024
U6 4585
7X33K
S1 SW DIP-4
F5 0.3A SB
F1 8A (15A) FB
F2 8A (15A) FB
F3 8A (15A) FB
F4 8A (15A) FB
X1
X2
X3
X4
X5
H
T1
T2
T3
P1
P2
P3
GC

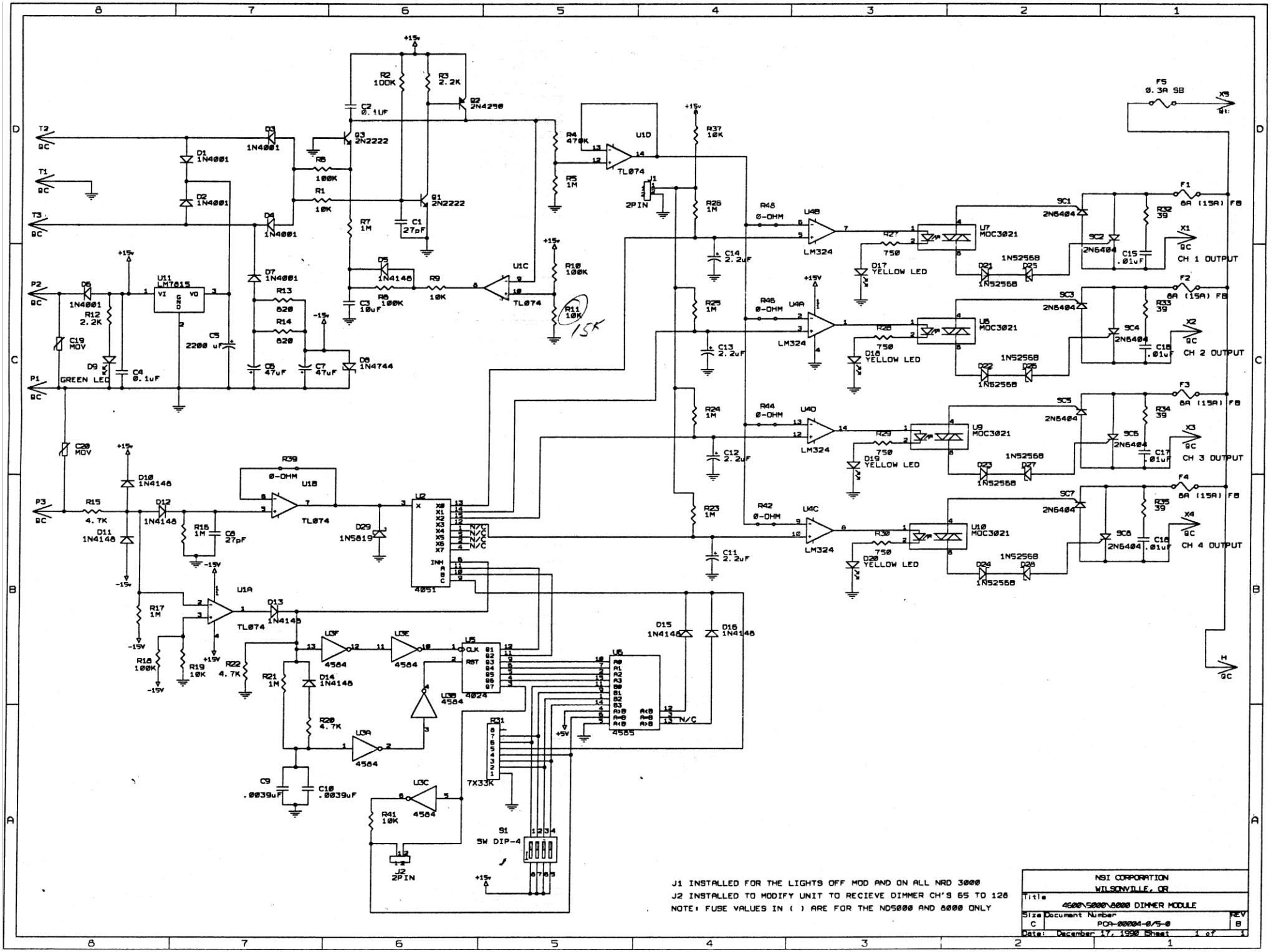
NSI CORPORATION
WILSONVILLE, OR
Title
4600\5000\8000 DIMMER MODULE
Size C
Document Number
PCA-00004-0/5-0
REV B
Date: December 17, 1990 Sheet 1 of 1
J1 INSTALLED FOR THE LIGHTS OFF MOD AND ON ALL NRD 3000
J2 INSTALLED TO MODIFY UNIT TO RECIEVE DIMMER CH'S 65 TO 128
NOTE: FUSE VALUES IN ( ) ARE FOR THE ND5000 AND 8000 ONLY
CH 1 OUTPUT
CH 2 OUTPUT
CH 3 OUTPUT
CH 4 OUTPUT
GREEN LED
YELLOW LED
5W DIP-4
7X33K
2PIN
4051
4024
4585
LM324
TL074
MOC3021
2N6404
1N5256B
8A (15A) FB
F5 0.3A SB