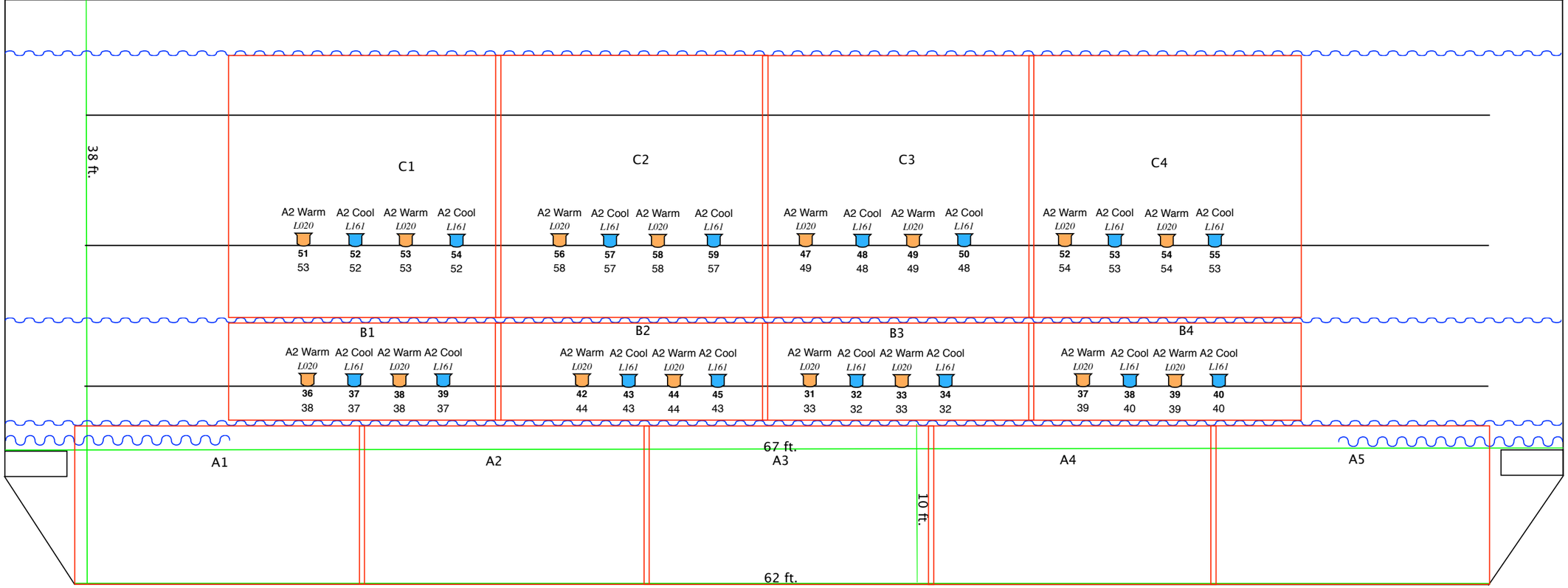

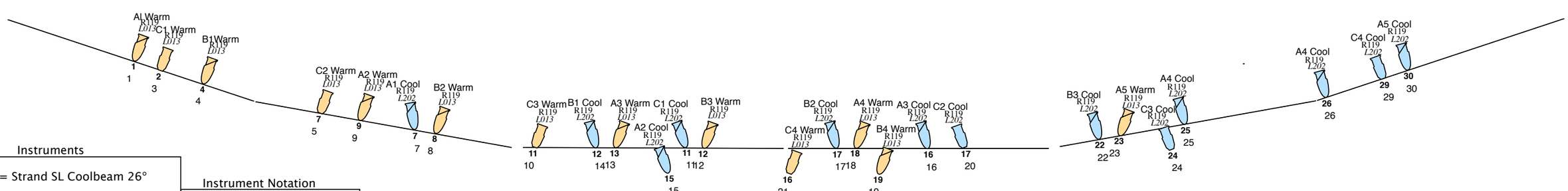

Instruments

- = Strand SL Coolbeam 26°
- = ETC Source Four 36°
- = Altman 65Q 6inch Fresnel
- = Altman EconoCyc

Instrument Notation

- Purpose
- X### Frost Number
- X### Gel Number
- # Closest Dimmer Outlet
- # Dimmer

Attachments

- = Barndoor
- = Top Hat
- = Gobo
- = Iris

Warm and Cool Base Plot

Designer: Cameron Walkup

7/22/14